NOTES

1. MATL - DRAWN STEEL TUBING - SEE PART DWGS
2. "D" INDICATES DRAINAGE NOTCH POINTS. WHERE PARTS ARE SYMMETRICAL, ONLY ONE NOTCH IS SHOWN, BUT BOTH PARTS ARE TO BE NOTCHED.
3. "S" INDICATES SEAL WELDING ALL AROUND THE PART IN ONE CONTINUOUS WELD. IN CASE OF THE FOOT ACTUATOR HOLDER, OLDER FABRICATIONS WITH THIS PART LAPPED UP OVER THE SIDE OF THE SQUARE TUBING WILL REQUIRE SEAL WELDING. ON THE LATER VERSION THE BUTT OR FLAT WELD WILL NOT REQUIRE SEALING ALL AROUND.
4. COMPONENTS

1.	BASE	40-B-1358
2.	UPRIGHT	40-D-447
3.	GUSSET, REAR	40-A-1262
4.	CROSS PROP	40-A-1261
5.	GUSSET, UPRIGHT	40-A-661
6.	BACK	40-B-1260
7.	STAIR CLIMBER	40-A-112
8.	TUBE, MOTOR SUPPORT	40-A-138
9.	NUT, HEX, HEAVY, 1-1/8-12NF	A194-21
10.	PLATE, REINFORCING	40-A-678 & 40-A-679
11.	HOOK, CORD	40-B-421
13.	NUT, HEX, HEAVY, 1/2-13NC	40-A-138

5. FOR PLATING APPLICATIONS ALL WELDS REQUIRE A POROSITY SEAL WITH LOCTITE 290.

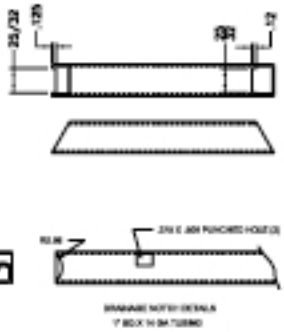

NOTE – SAME AS 40-D-447-3 WITH THE ADDITION OF ITEM 14, PASSIVE BRAKE TUBE., 00-A-440 AND WITHOUT THE FOOT PEDAL ACTUATOR HOLDER

FRAME, FABRICATED, ER	PAK	2-8-05	1
			00-D-441

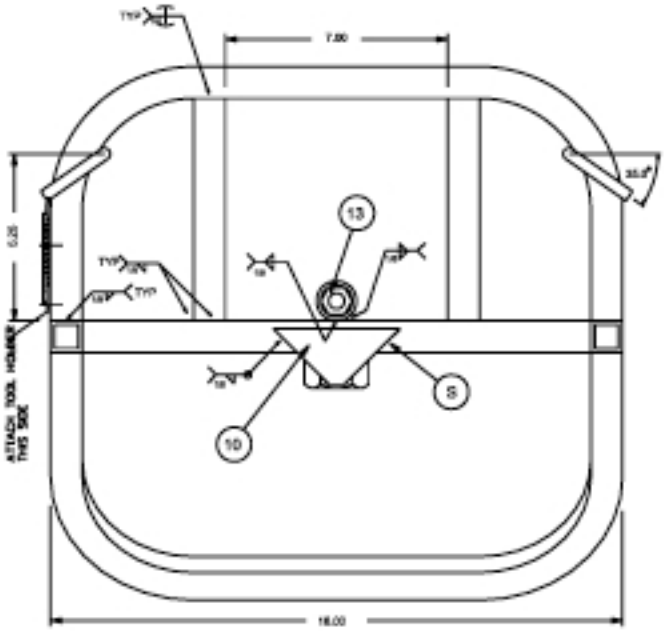

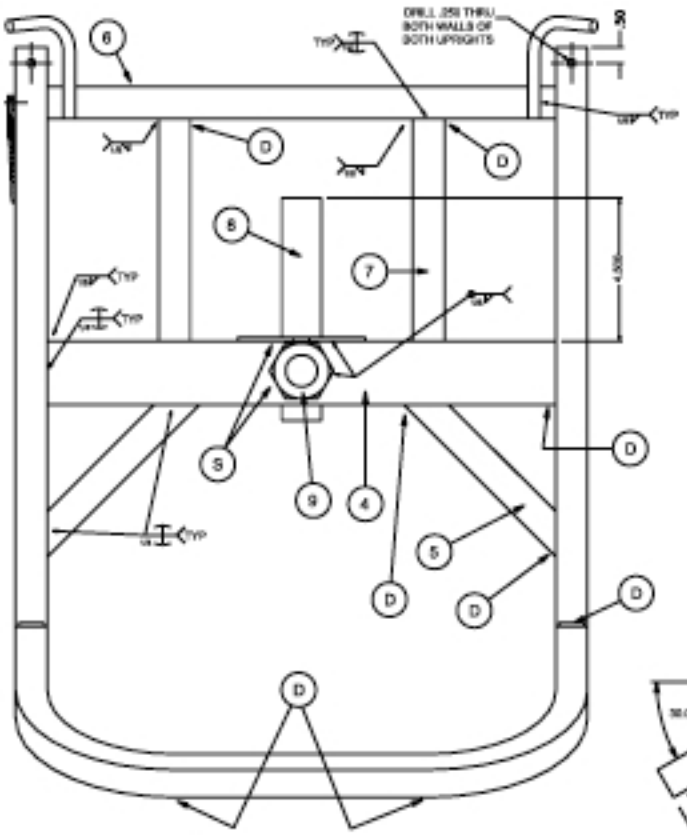

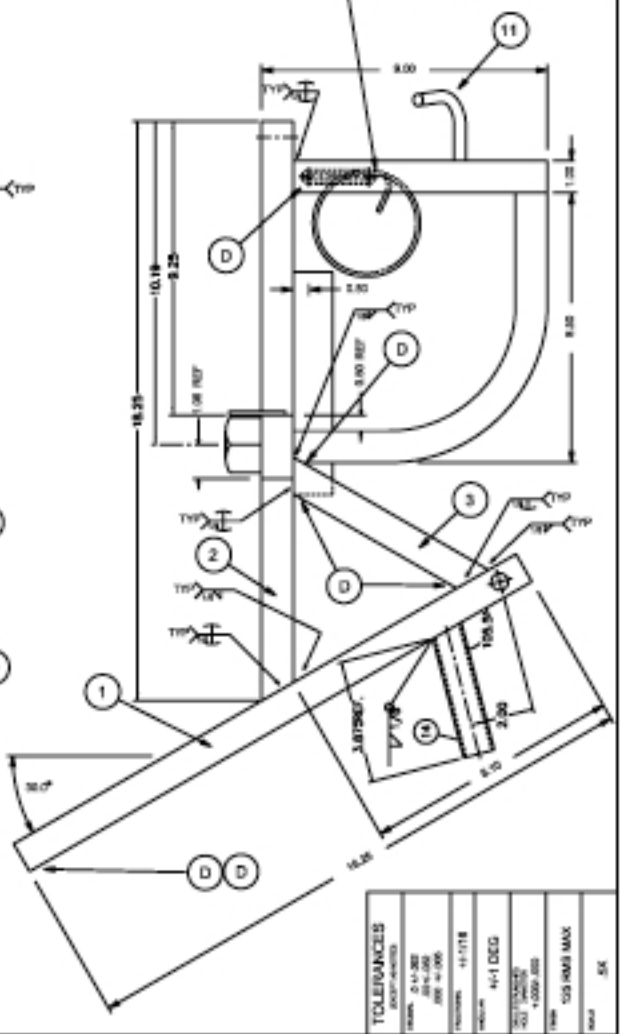

TOLERANCES

±0.1 DEG

TOS HMS MAX